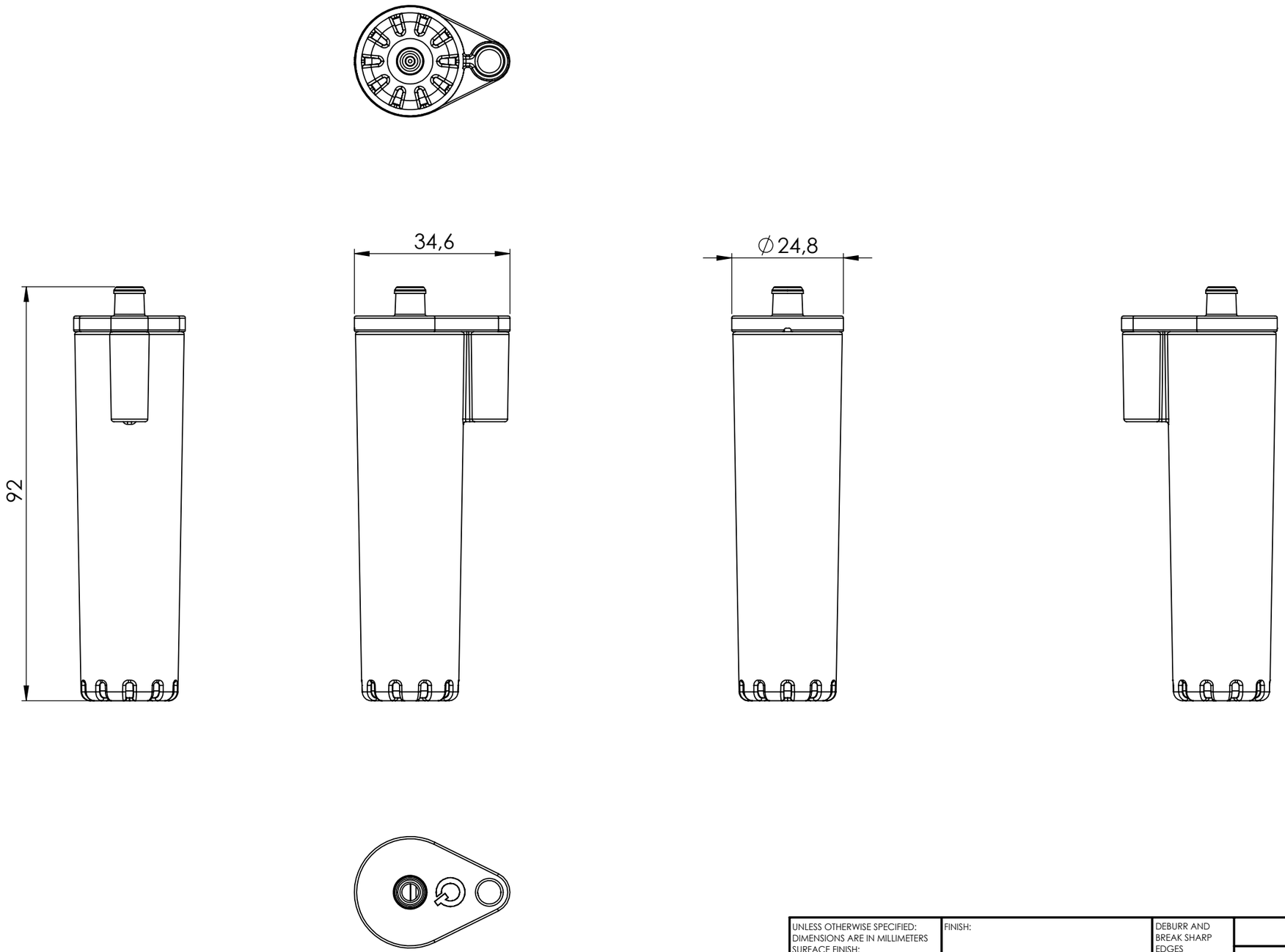

UNLESS OTHERWISE SPECIFIED: DIMENSIONS ARE IN MILLIMETERS SURFACE FINISH: TOLERANCES: LINEAR: ANGULAR:	FINISH:			DEBURR AND BREAK SHARP EDGES	DO NOT SCALE DRAWING	REVISION
					SUNDRAX Ltd.	
	NAME	SIGNATURE	DATE		TITLE: Flood sensor Dimensional drawing	
DRAWN	Alex Michaelson					
CHK'D						
APPV'D						
MFG						
Q.A				MATERIAL:	DWG NO. QUL-SP-FS DD	A3
				WEIGHT:	SCALE:1:1	SHEET 1 OF 1