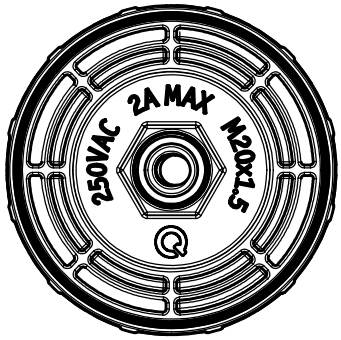

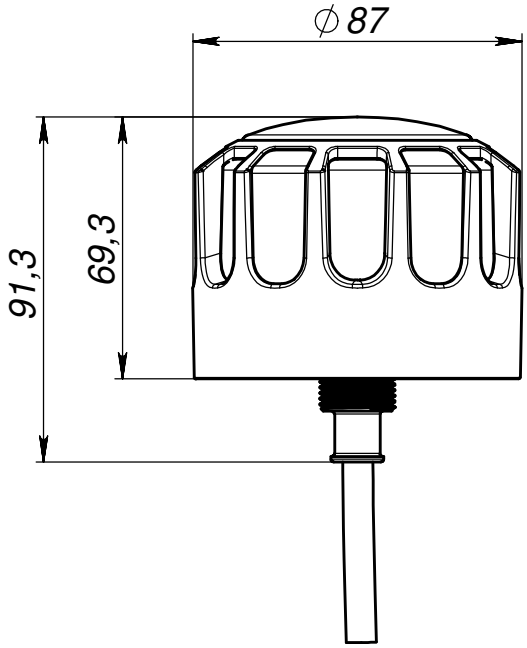

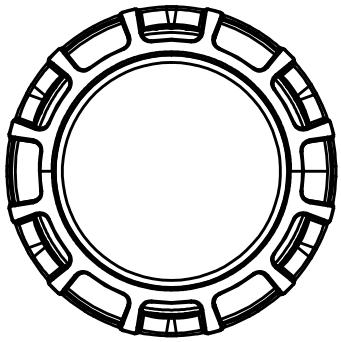

UNLESS OTHERWISE SPECIFIED: DIMENSIONS ARE IN MILLIMETERS SURFACE FINISH: TOLERANCES: LINEAR: ANGULAR:	FINISH:	DEBURR AND BREAK SHARP EDGES	DO NOT SCALE DRAWING / REVISION

SUNDRAX Ltd.

	NAME	SIGNATURE	DATE
DRAWN	Andrew Underwood		
CHK'D			
APPV'D			
MFG			
Q.A			

TITLE:

QCase-L-WIRE
Dimensional drawing

MATERIAL:

WEIGHT:

DWG NO. *QCase-L-Wire*

A4

SCALE:1:2

SHEET 4 OF 4