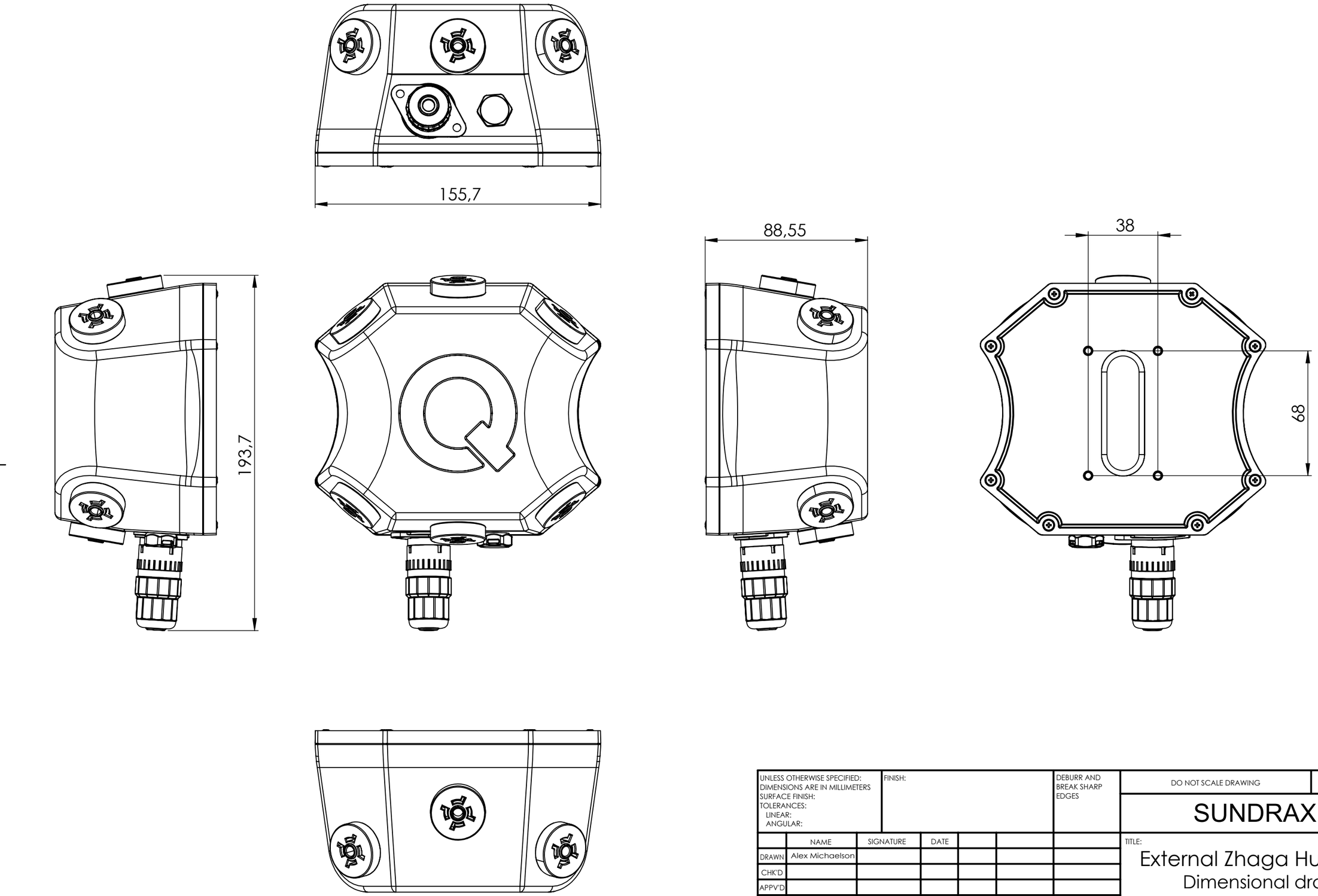

UNLESS OTHERWISE SPECIFIED: DIMENSIONS ARE IN MILLIMETERS SURFACE FINISH: TOLERANCES: LINEAR: ANGULAR:	FINISH:	DEBURR AND BREAK SHARP EDGES	DO NOT SCALE DRAWING	REVISION
			SUNDRAX Ltd.	

	NAME	SIGNATURE	DATE
DRAWN	Alex Michaelson		
CHK'D			
APPV'D			
MFG			
Q.A			

MATERIAL:

WEIGHT:

TITLE:
External Zhaga Hub Station
Dimensional drawing

DWG NO.
QUL-SPHS-EX-Z6 DD

A3

SCALE:1:2

SHEET 1 OF 1